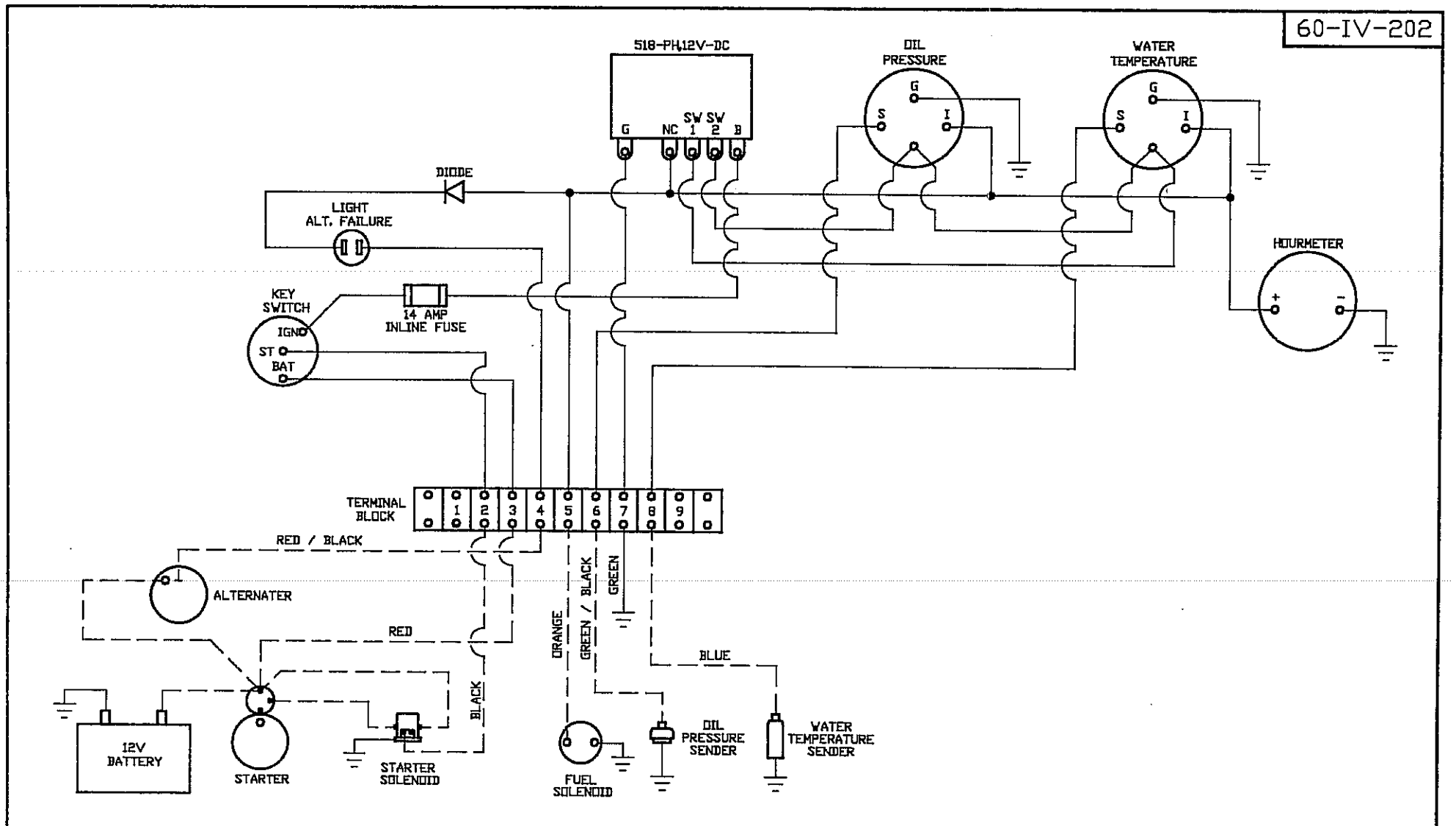

ITEM	Q'TY	DESCRIPTION

SCHEMATIC, EO-2 PANEL, IVECO 8031I, KOLBERG-PIONEER

PIVOT POWER INC.
SIOUX FALLS, SD

DATE	DRAWING NUMBER	REVISION
24JUL98	60-IV-202	A
SCALE 1"=1"	SHEET 1 OF 1	